

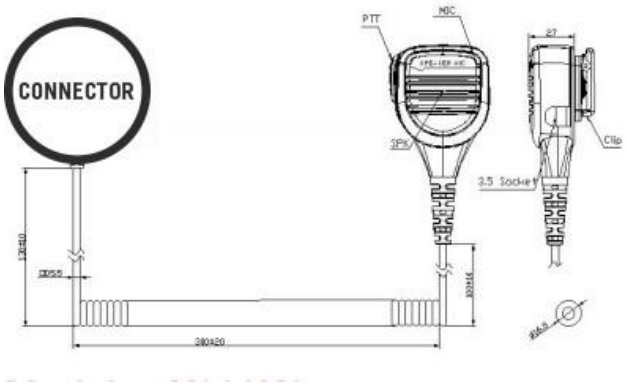

Model: TX308- (xxx)

Connector Suffix	Radio Models
M01 	Micrófono - Bocina para Intemperie. Para TC-500/ 518/ 600/ 610/ 700 y para GP300/ SP-50/ P1225/ PRO3150/ MAG ONE/ EP450/ EP350

Speaker Specification:	
Type:	Moving coil dynamic speaker
Impedance:	8Ω±15% at 1000Hz
Sensivity:	92±3dB/1Watt. 0.5Meter
Frequency respond:	(F0) ~20 kHz
Rated input power:	F0~9KHz
Maximum input:	500 mW

Microphone Specification:	
Sensivity range:	-30 ± 3 dB (0 dB=1 V/Pa,at 1 kHz)
Impedance max:	2.2KΩ 1kHz (RL=2.2KΩ)
Frequency:	20 ~ 20 kHz (0 dB=1V/Pa, 1 kHz)
Operation Voltage Range:	1.0 V - 10 V(DC)